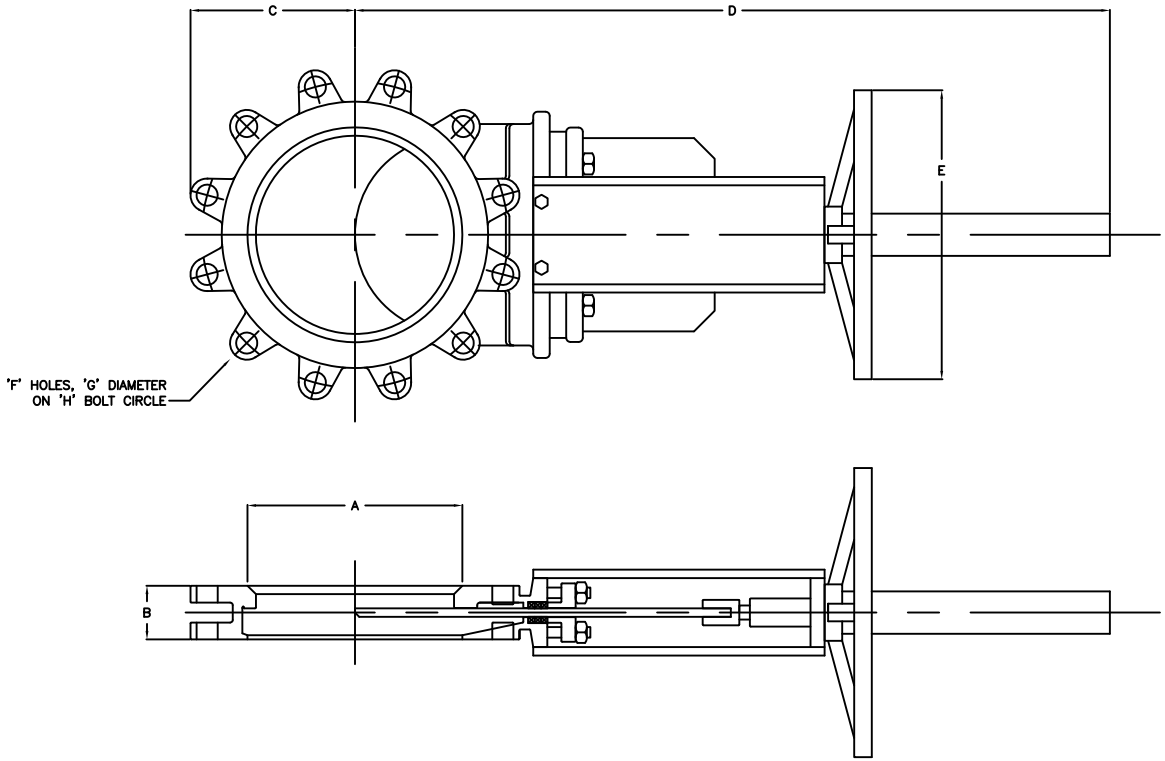

SIZE	A	B	C	D	E	F	G	H	WEIGHT
2"	2	1⅞	3	16½	8⅞	4	⅝ UNC	4¾	18 LBS
4"	4	2	4⅜	20⅜	8⅞	8	⅝ UNC	7½	28 LBS
6"	6	2¼	5⅜	25¼	8⅞	8	¾ UNC	9½	45 LBS
8"	8	2¾	6⅝	32¼	12¼	8	¾ UNC	11¾	75 LBS
10"	10	2¾	8	38⅞	12¼	12	⅞ UNC	14¼	105 LBS
12"	12	3	9⅜	42⅛	16⅛	12	⅞ UNC	17	145 LBS
14"	14	3	10¼	49	16⅛	12	1 UNC	18¾	215 LBS
16"	16	3½	11½	52⅛	16⅛	16	1 UNC	21¼	270 LBS
18"	18	3½	12⅜	59½	21⅝	16	1⅛ UNC	22¾	355 LBS
20"	20	4½	13½	63⅝	21⅝	20	1⅛ UNC	25	445 LBS
24"	24	4½	15¾	74⅛	21⅝	20	1¼ UNC	29½	640 LBS

1. FOR GENERAL GUIDANCE ONLY
2. DIMENSIONS ARE SUBJECT TO CHANGE WITHOUT NOTICE.

AMENDMENTS

Carolina Conveying

CAROLINA CONVEYING INC
BEAVERDAM INDUSTRIAL PARK
162 GREAT OAK DRIVE, CANTON, NC 28716
Tel : (828) 235-1005 Fax : (828) 235-1006

This drawing is the property of Carolina Conveying and is loaned subject to the condition that it shall not be reproduced, copied, loaned or submitted to others without our consent.

CLIENT

SCALE N.T.S.

DRAWN	CHECKED	APPROVED
PCG		
24JAN13		

TITLE ROUND HANDWHEEL KNIFE GATE VALVE GENERAL ARRANGEMENT

DRAWING No. KG-GA-TABLE-HW

ISSUE 1